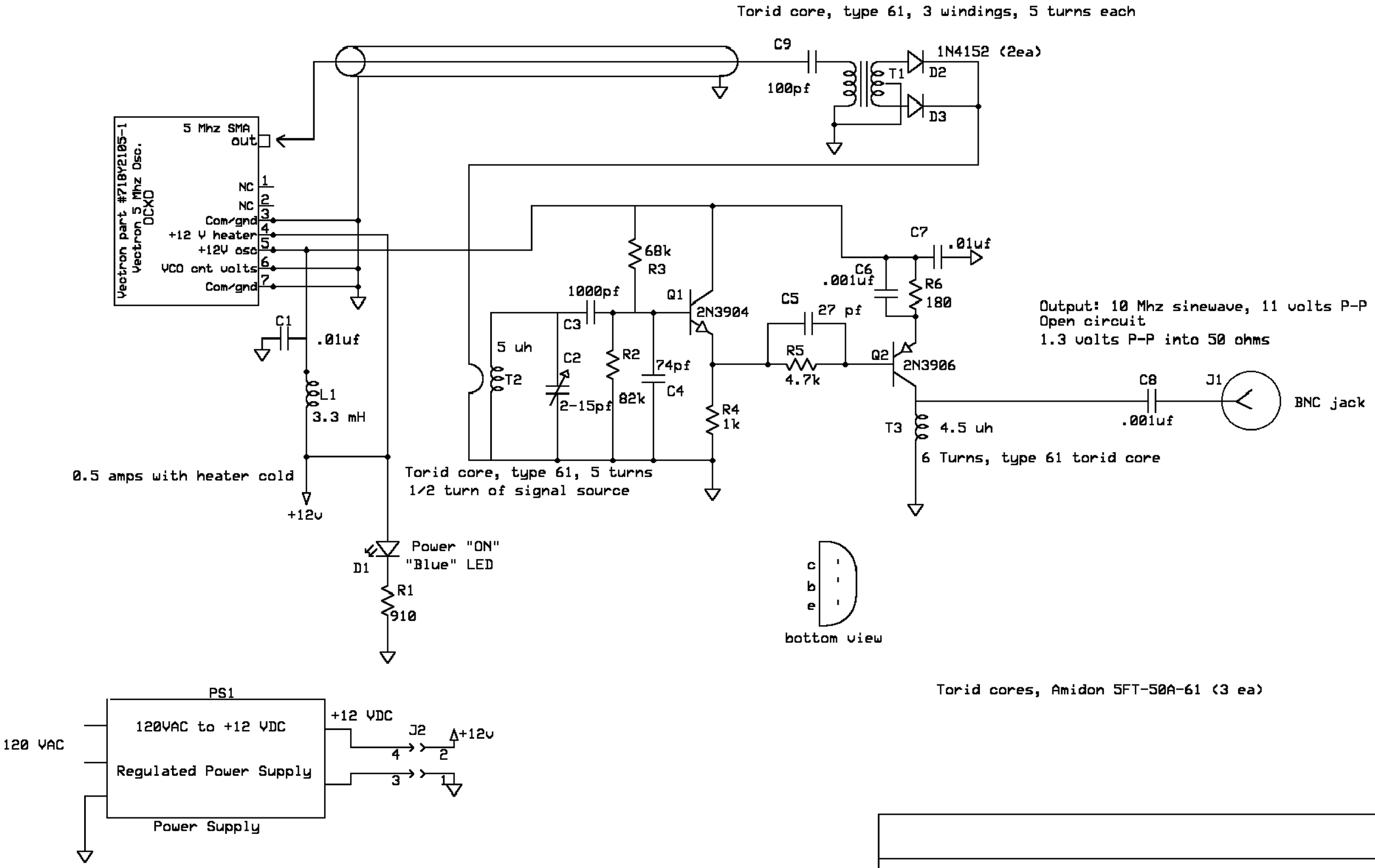


| | | |
|---|---|---|
| 10 Mhz Reference Oscillator | | |
| Neil Robin | Rev 3.0<br>12/31/08 | Page # 1 or 1 |